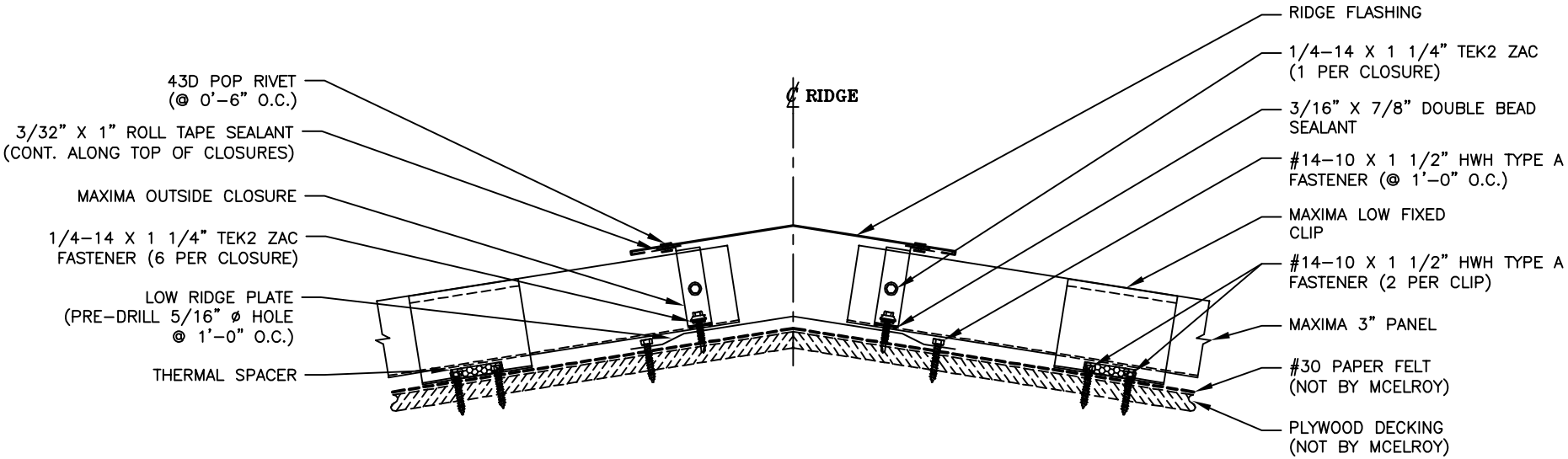RIDGE DETAIL (PLATE)