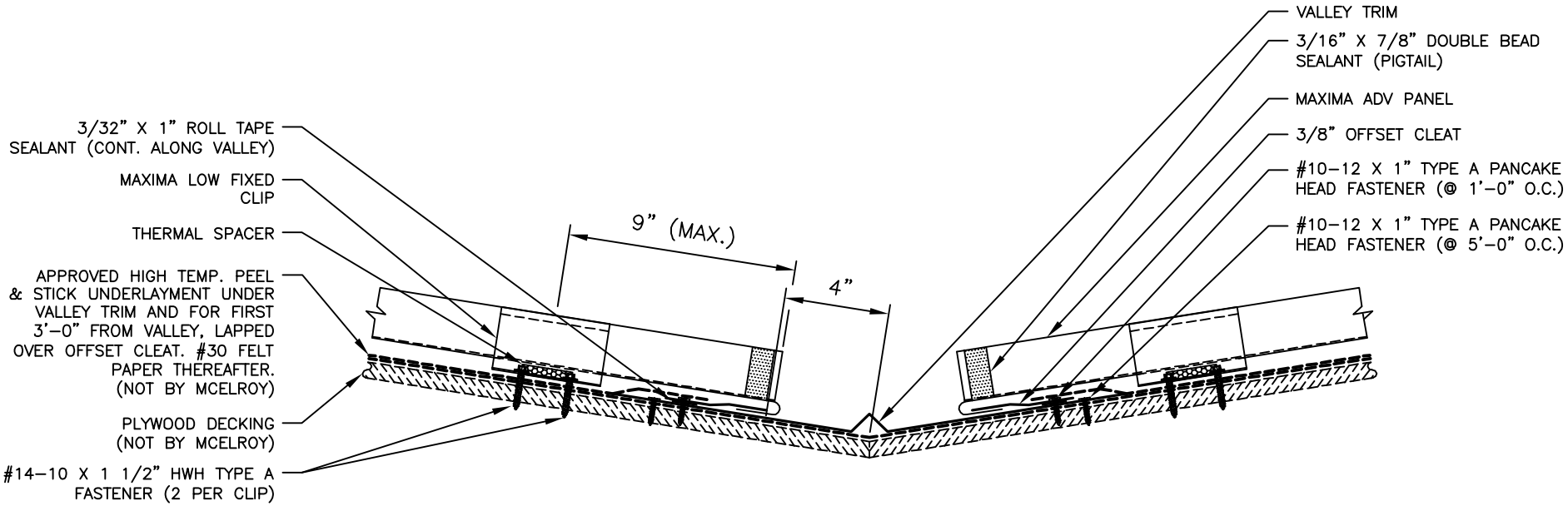VALLEY DETAIL