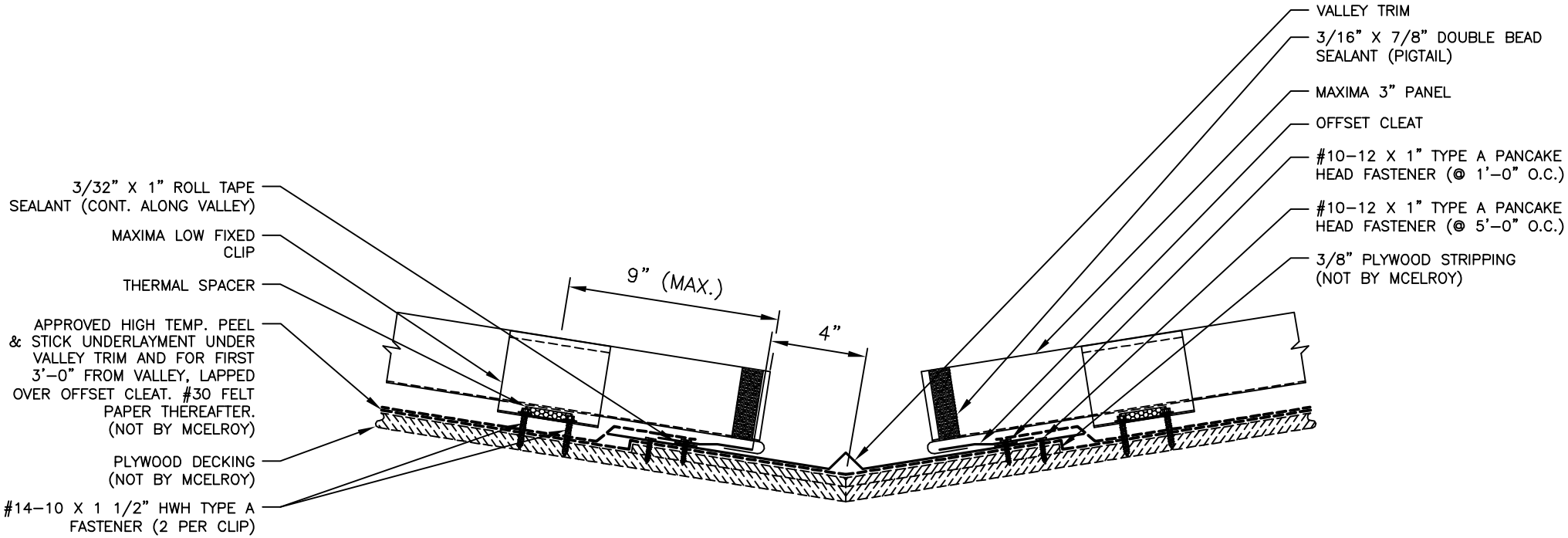VALLEY DETAIL (ALT.)