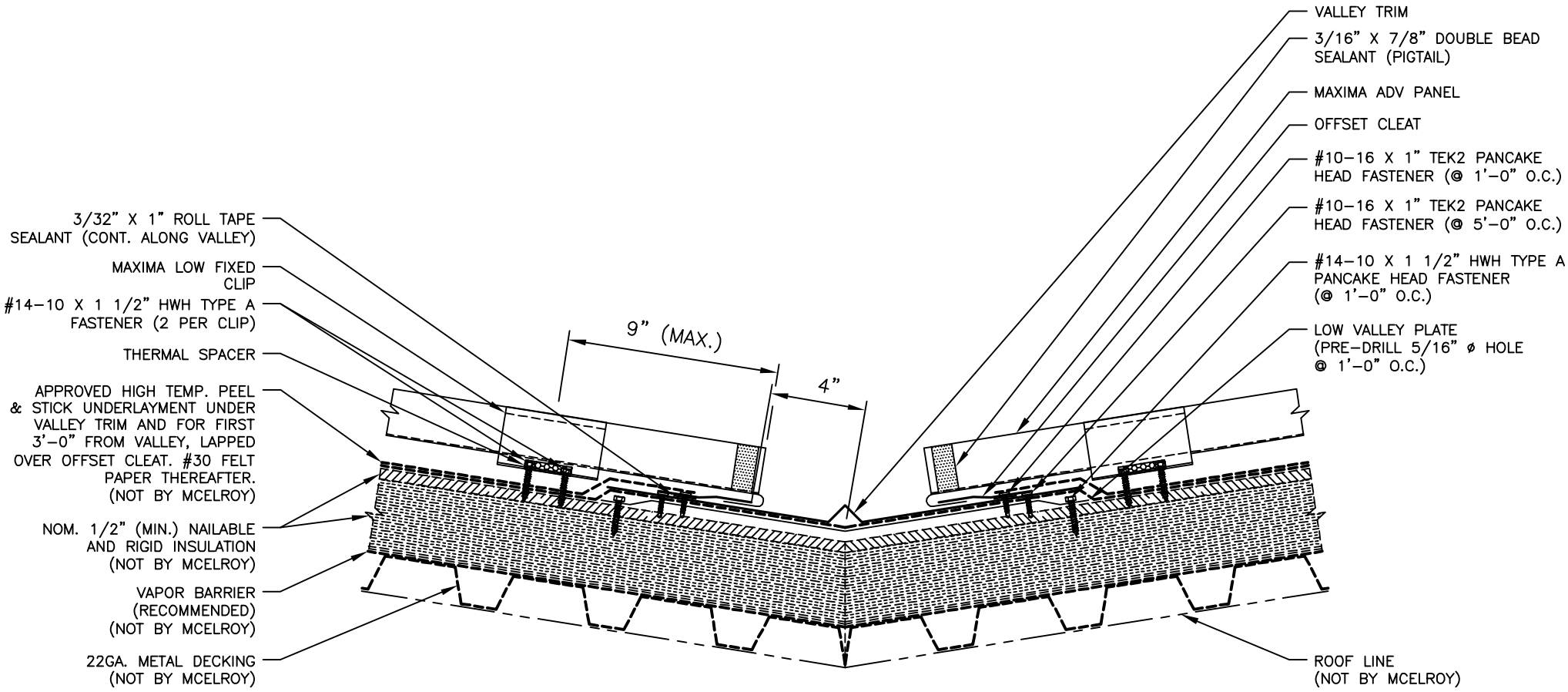VALLEY DETAIL (PLATE)