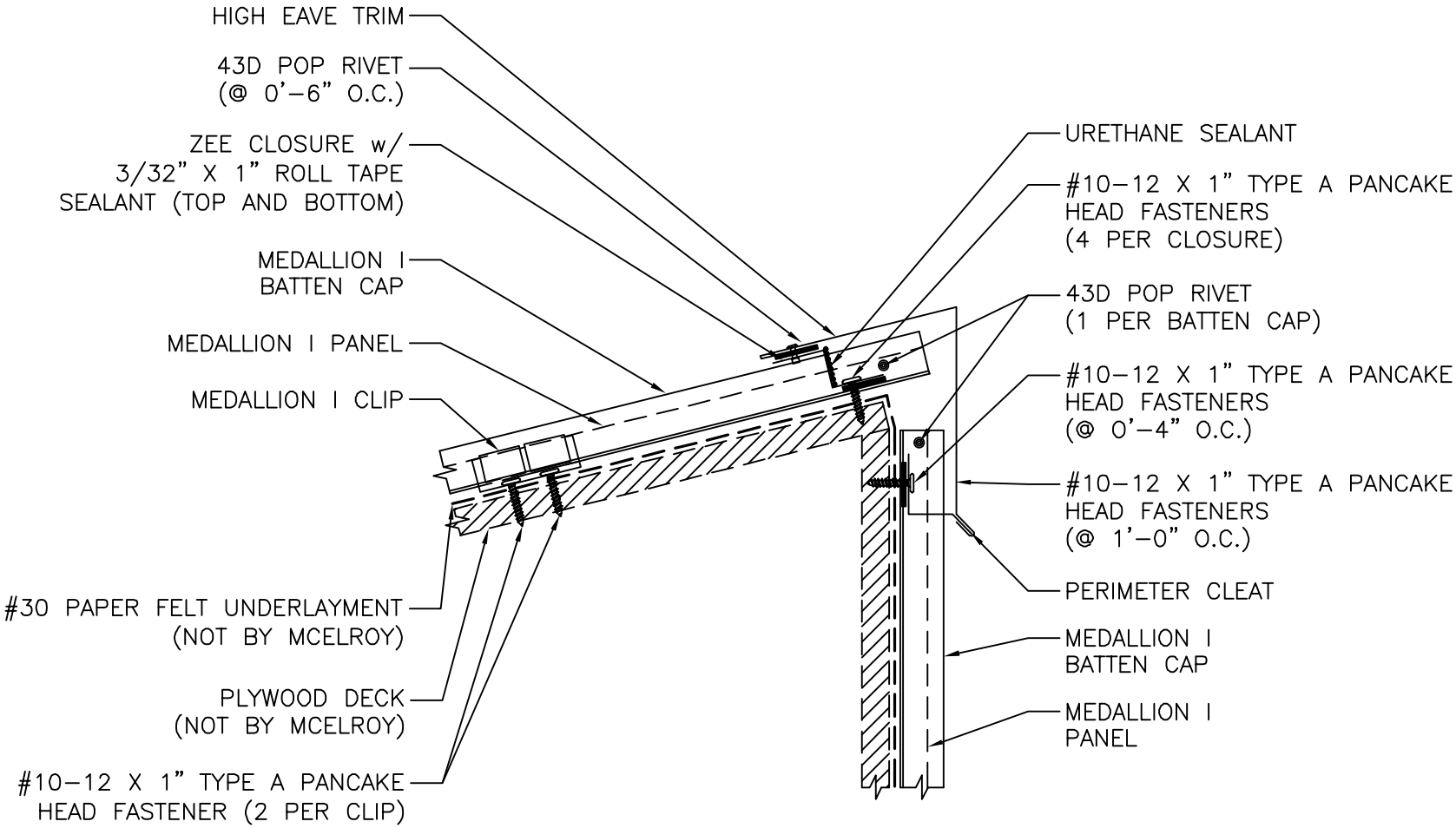

McELROY METAL

HIGH SIDE EAVE TO WALL PANEL DETAIL

ISSUE/REVISION DATE: 06/19/2020

ROOF PANEL: MEDALLION I

SUBSTRATE: PLYWOOD

SCALE: N.T.S.