MAXIMA 2"
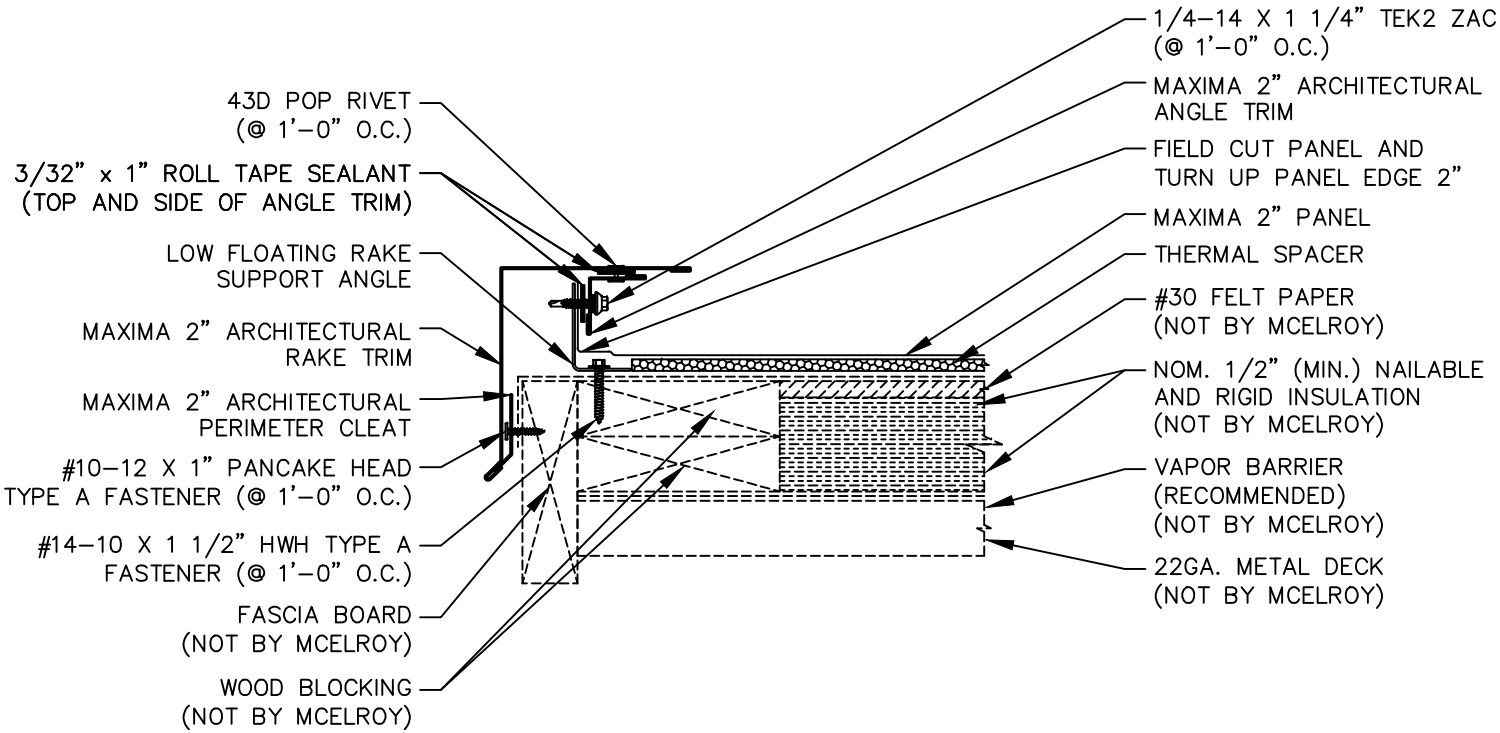
RAKE DETAIL (PANEL TURN UP)