MAXIMA 2"

RAKE DETAIL (PANEL TURN UP)

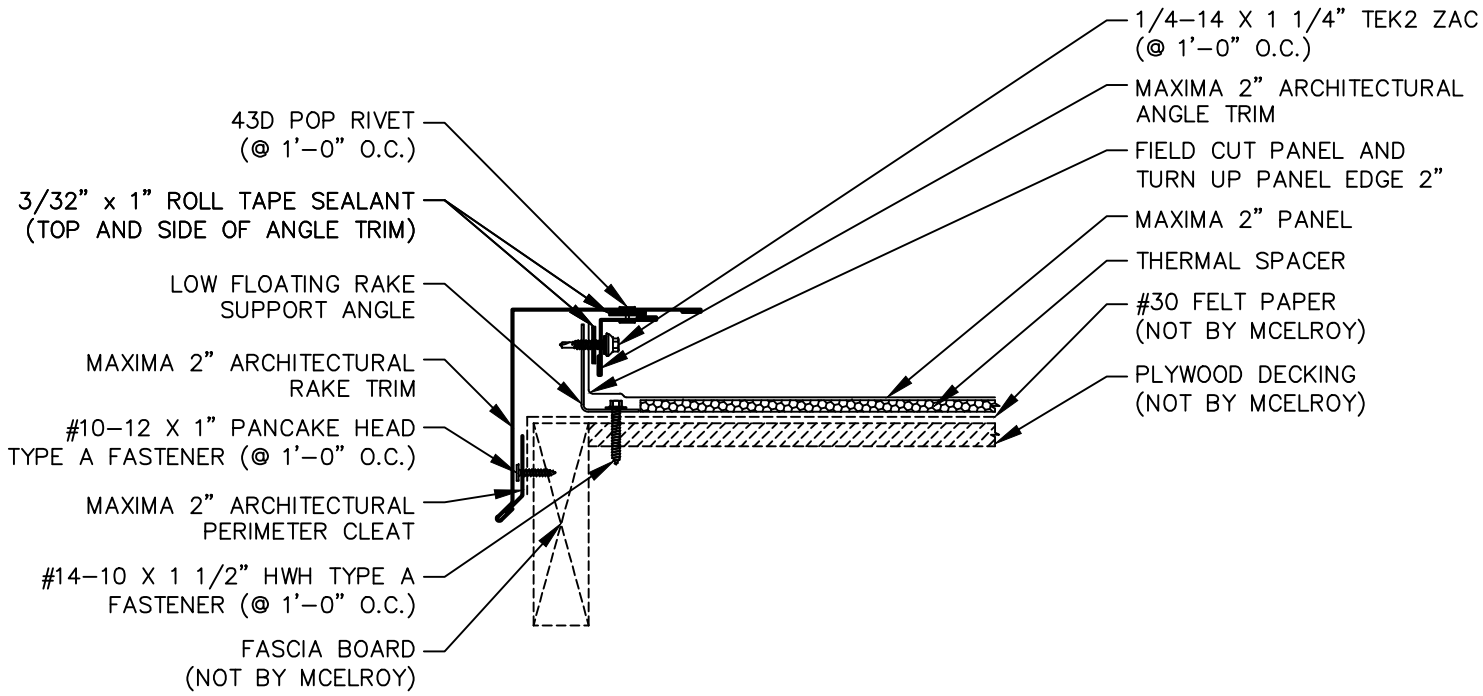

McELROY METAL, INC.

DATE CREATED: 06/11/12