MAXIMA 3"

RAKE TIE-IN DETAIL (PANEL TURN UP)

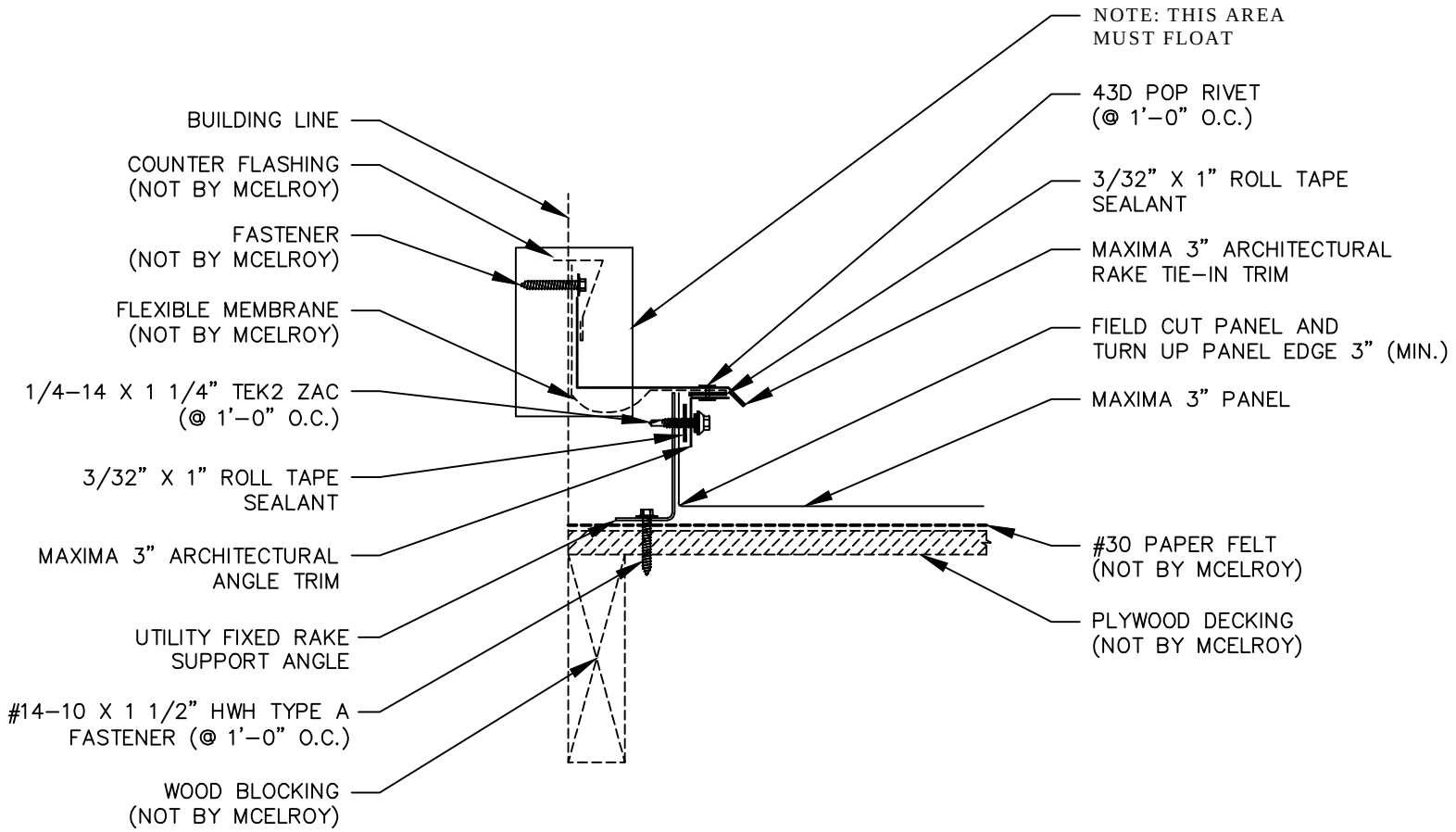

MCELROY METAL

DATE CREATED: 01/09/13