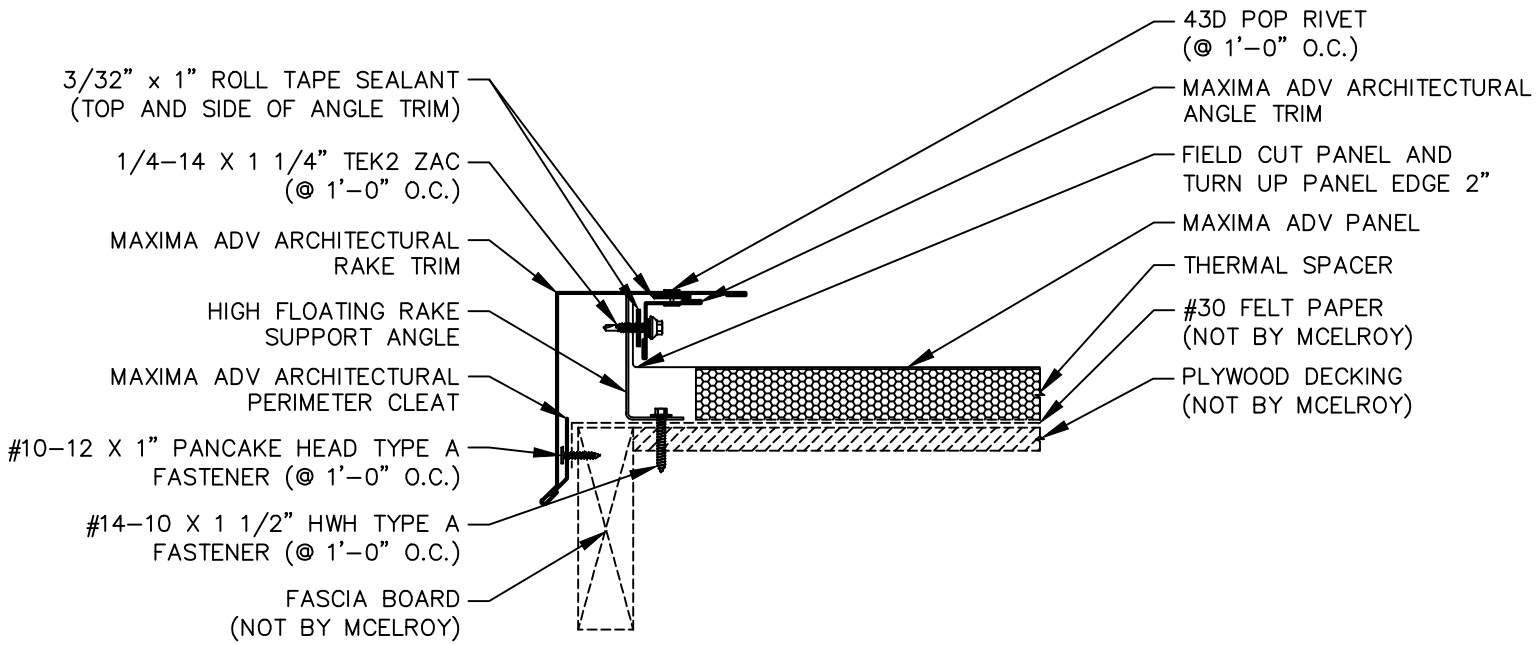RAKE DETAIL (PANEL TURN UP)