MAXIMA ADV

RAKE TIE-IN DETAIL (PANEL TURN UP)

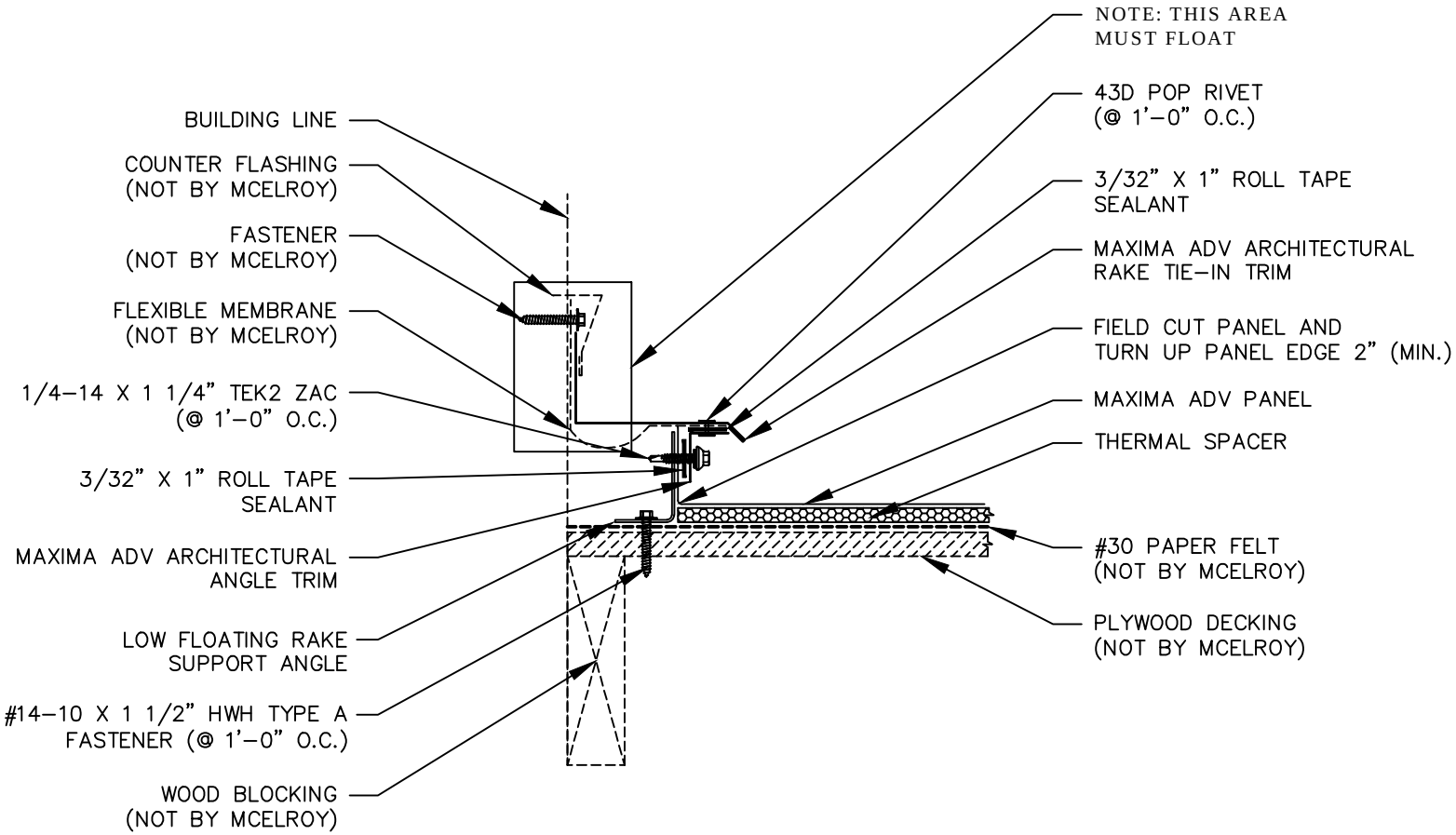

MCELROY METAL

DATE CREATED: 01/08/13