MAXIMA ADV
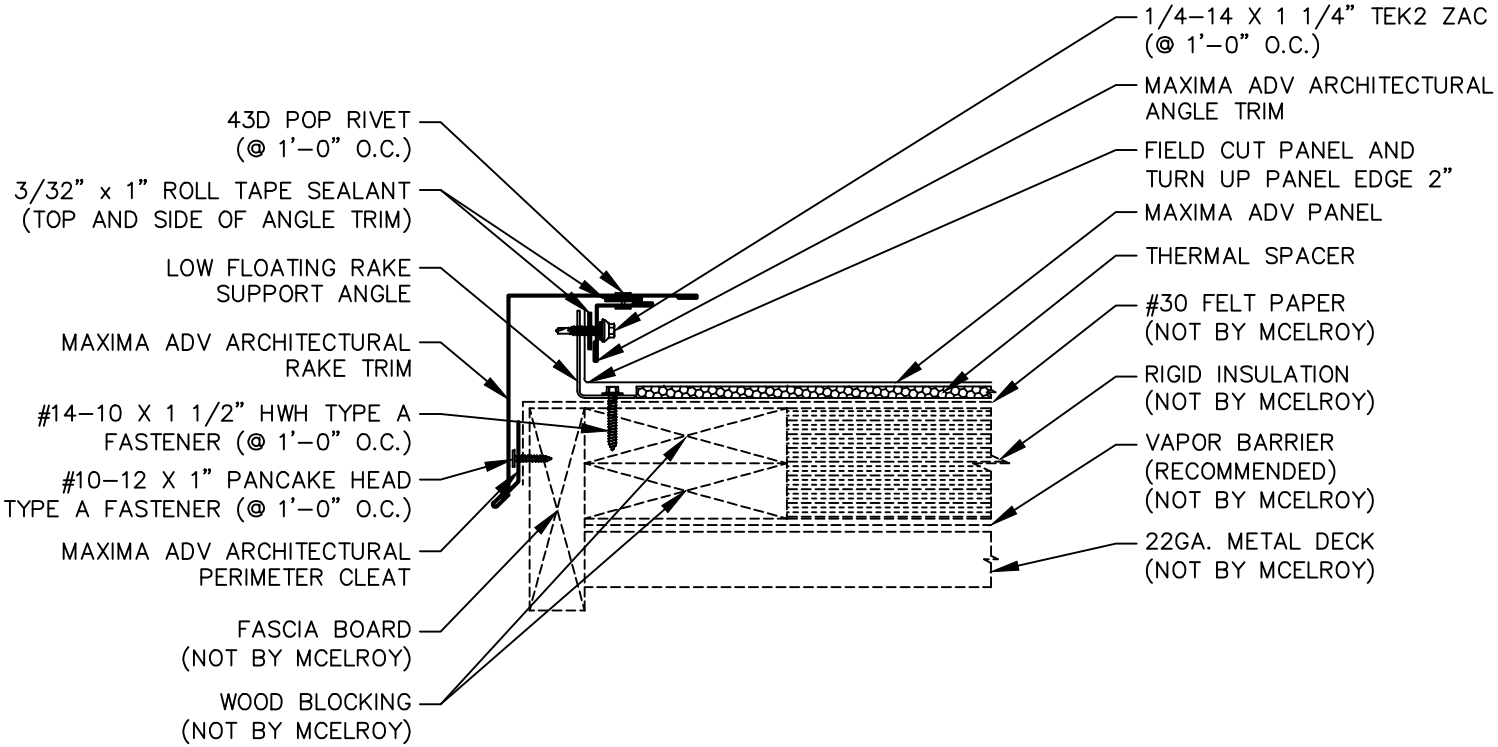
RAKE DETAIL (PANEL TURN UP)