MEDALLION I
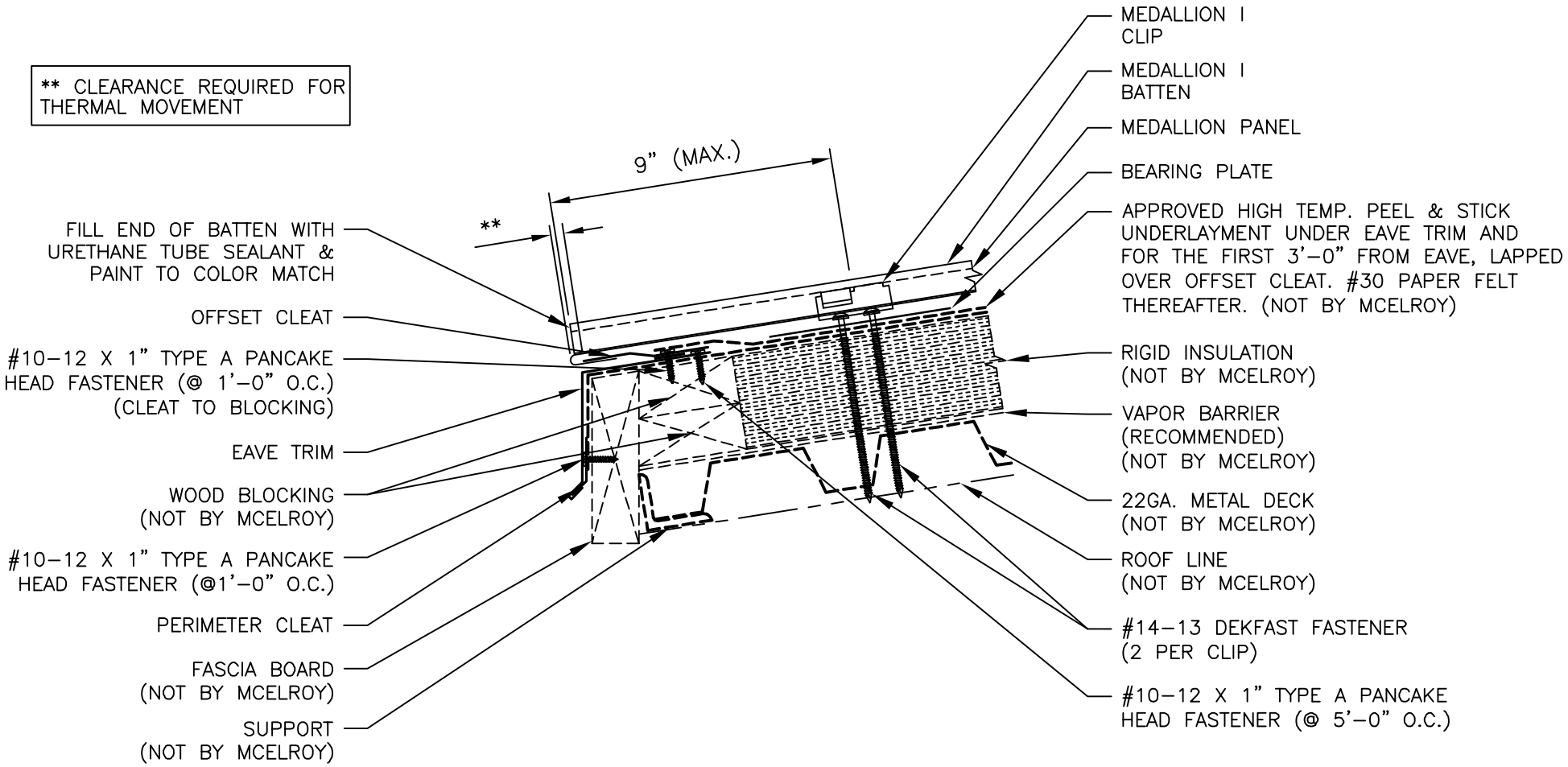
EAVE w/o GUTTER DETAIL