MEDALLION II
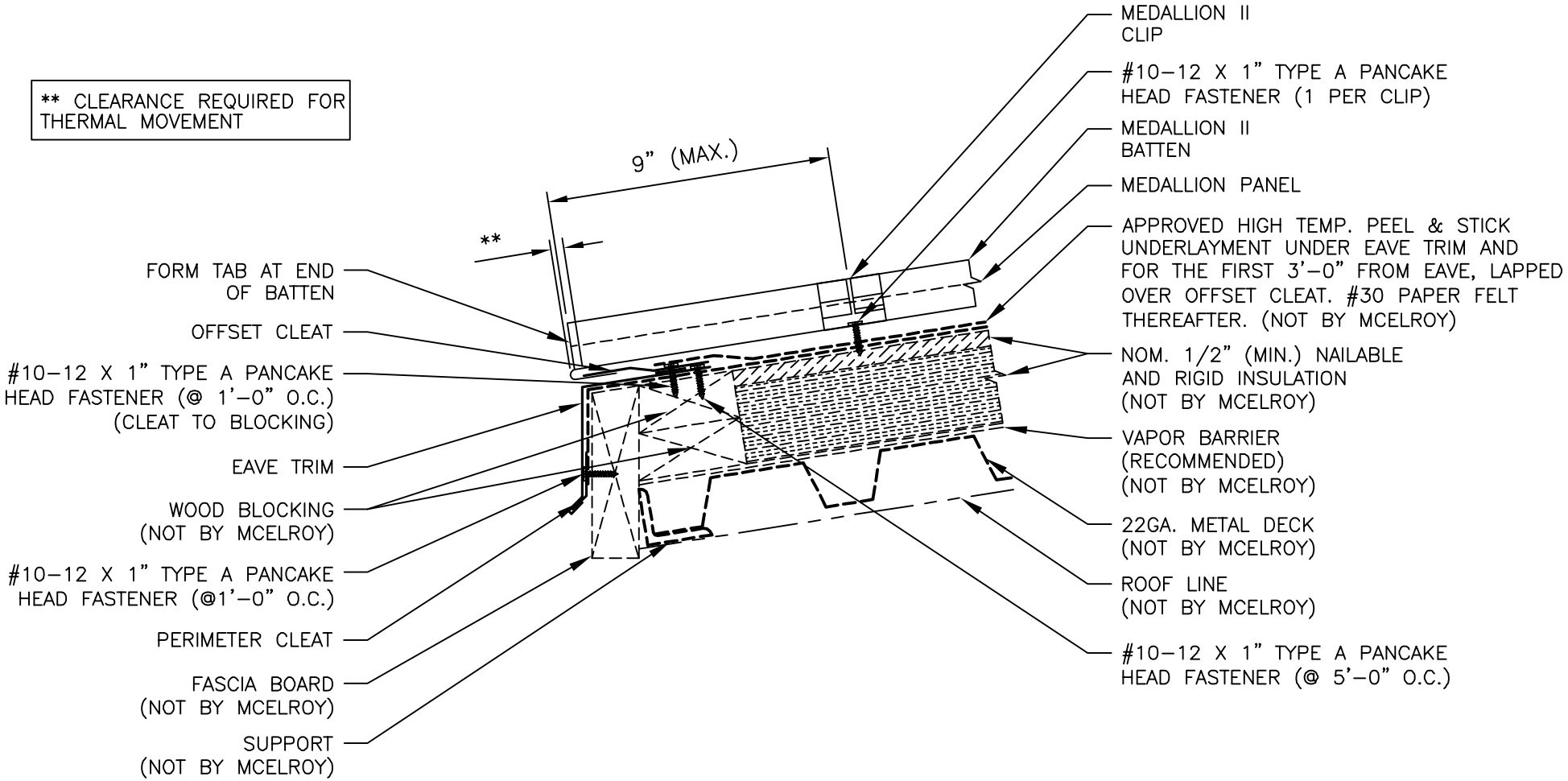
EAVE w/o GUTTER DETAIL