MEDALLION–LOK
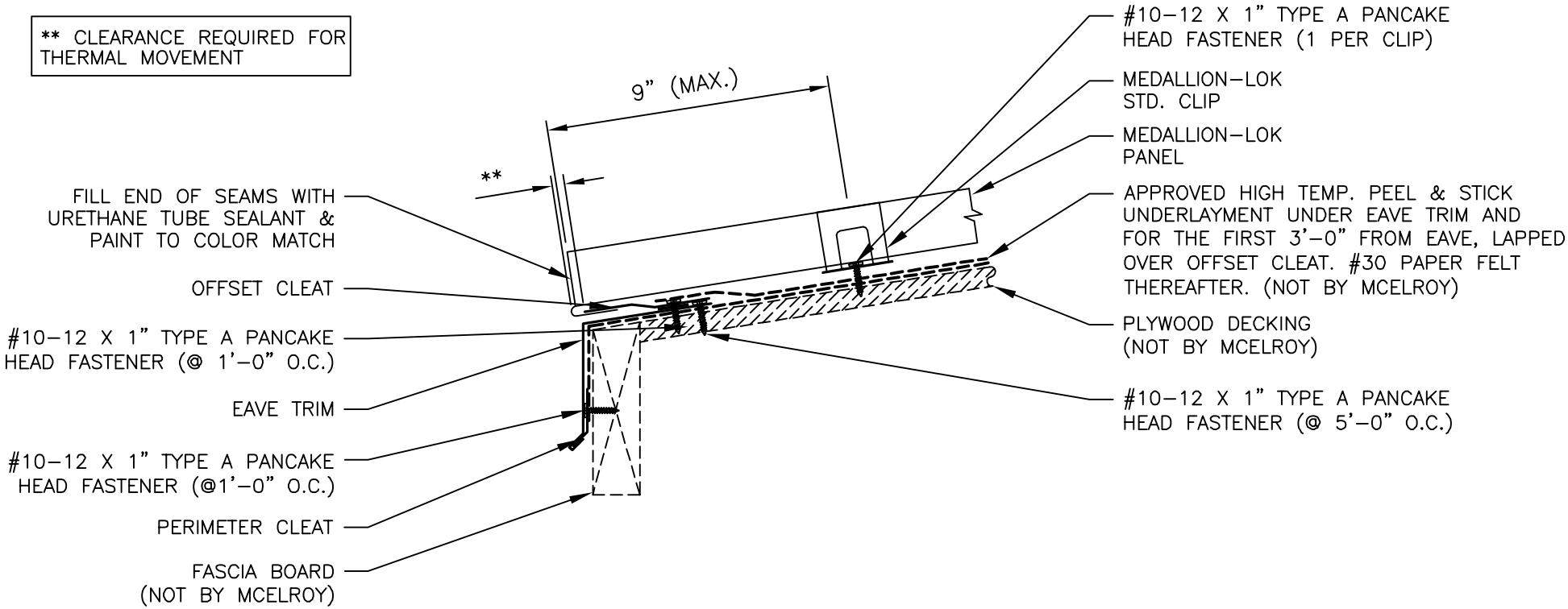
EAVE w/o GUTTER DETAIL