RAKE DETAIL

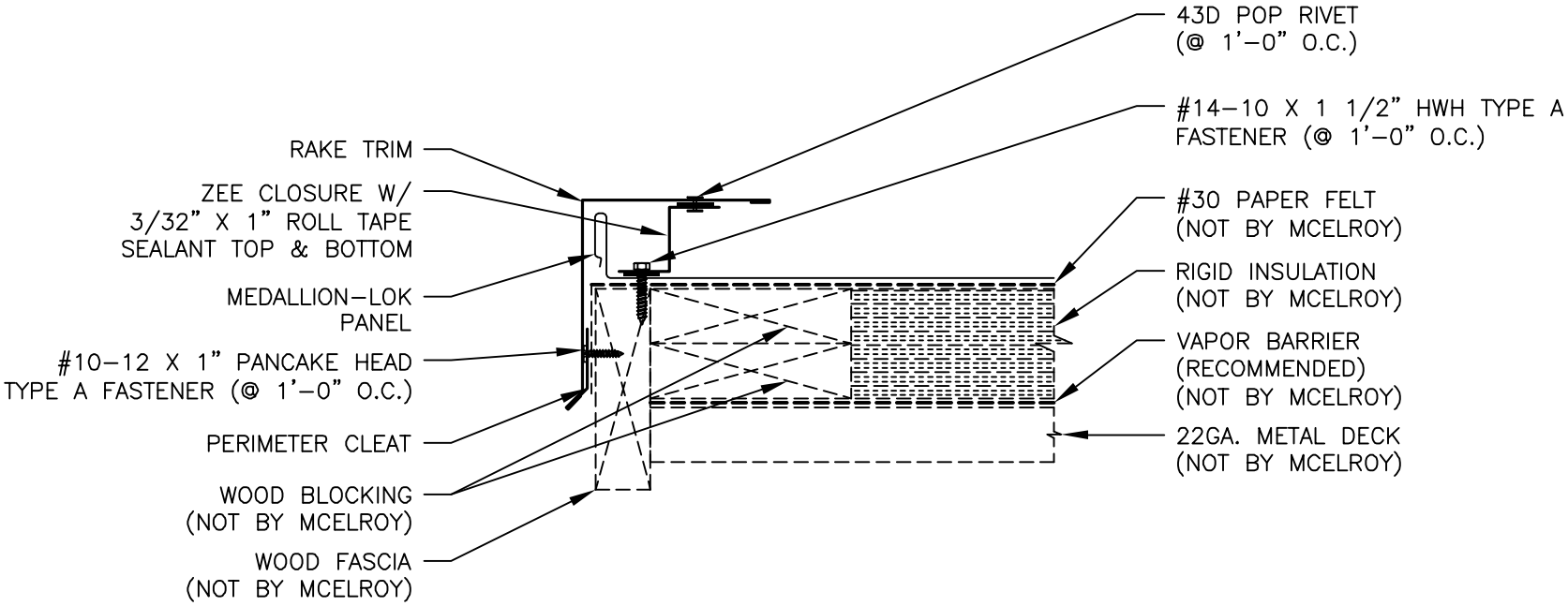
43D POP RIVET
(@ 1'–0" O.C.)
#14–10 X 1 1/2" HWH TYPE A
FASTENER (@ 1'–0" O.C.)
RAKE TRIM
ZEE CLOSURE W/
3/32" X 1" ROLL TAPE
SEALANT TOP & BOTTOM
MEDALLION–LOK
PANEL
#10–12 X 1" PANCAKE HEAD
TYPE A FASTENER (@ 1'–0" O.C.)
PERIMETER CLEAT
WOOD BLOCKING
(NOT BY MCELROY)
WOOD FASCIA
(NOT BY MCELROY)
#30 PAPER FELT
(NOT BY MCELROY)
RIGID INSULATION
(NOT BY MCELROY)
VAPOR BARRIER
(RECOMMENDED)
(NOT BY MCELROY)
22GA. METAL DECK
(NOT BY MCELROY)