MEDALLION II

RAKE DETAIL (ALT.)

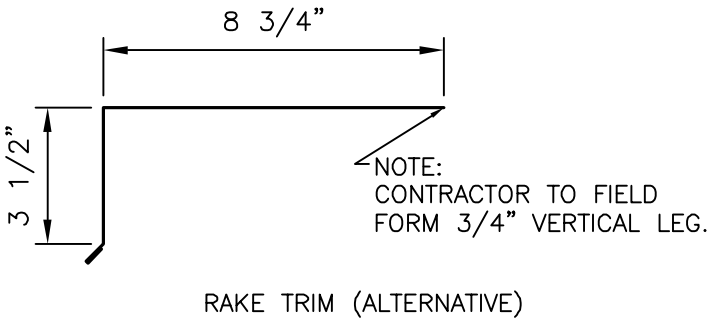

RAKE TRIM (ALTERNATIVE)

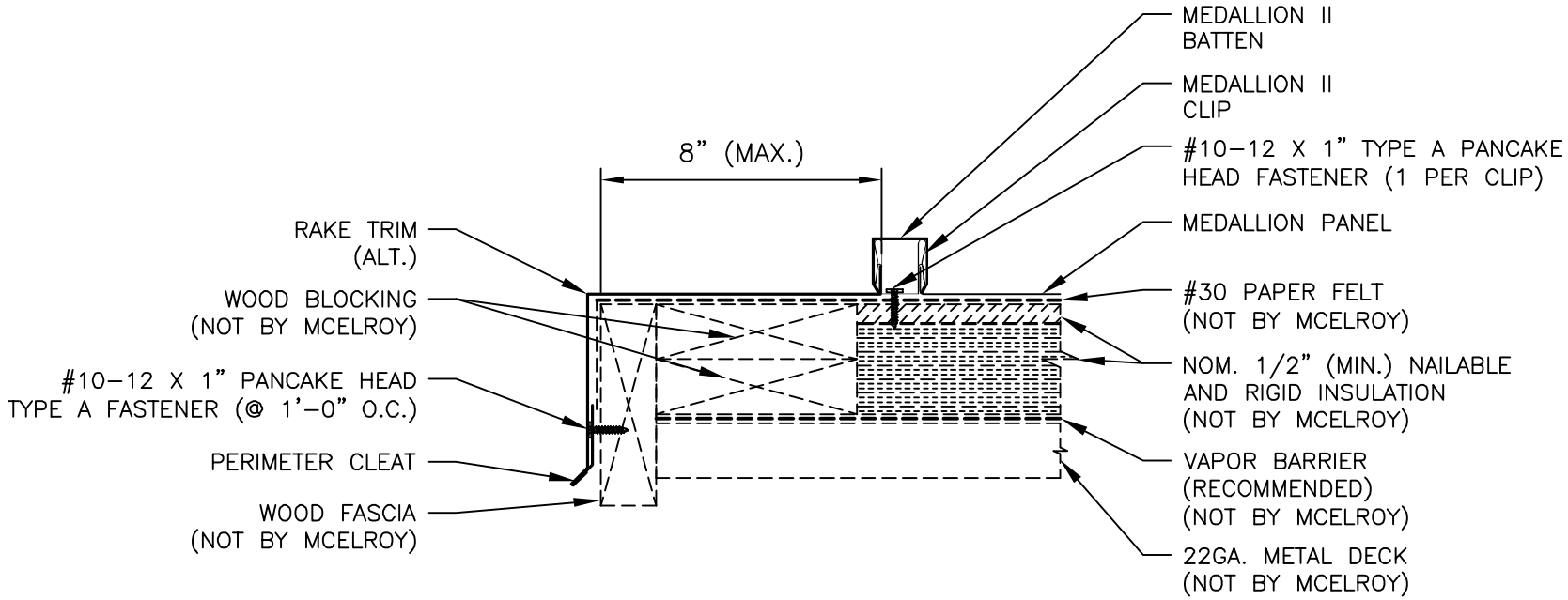

McELROY METAL, INC.

DATE CREATED: 06/19/08