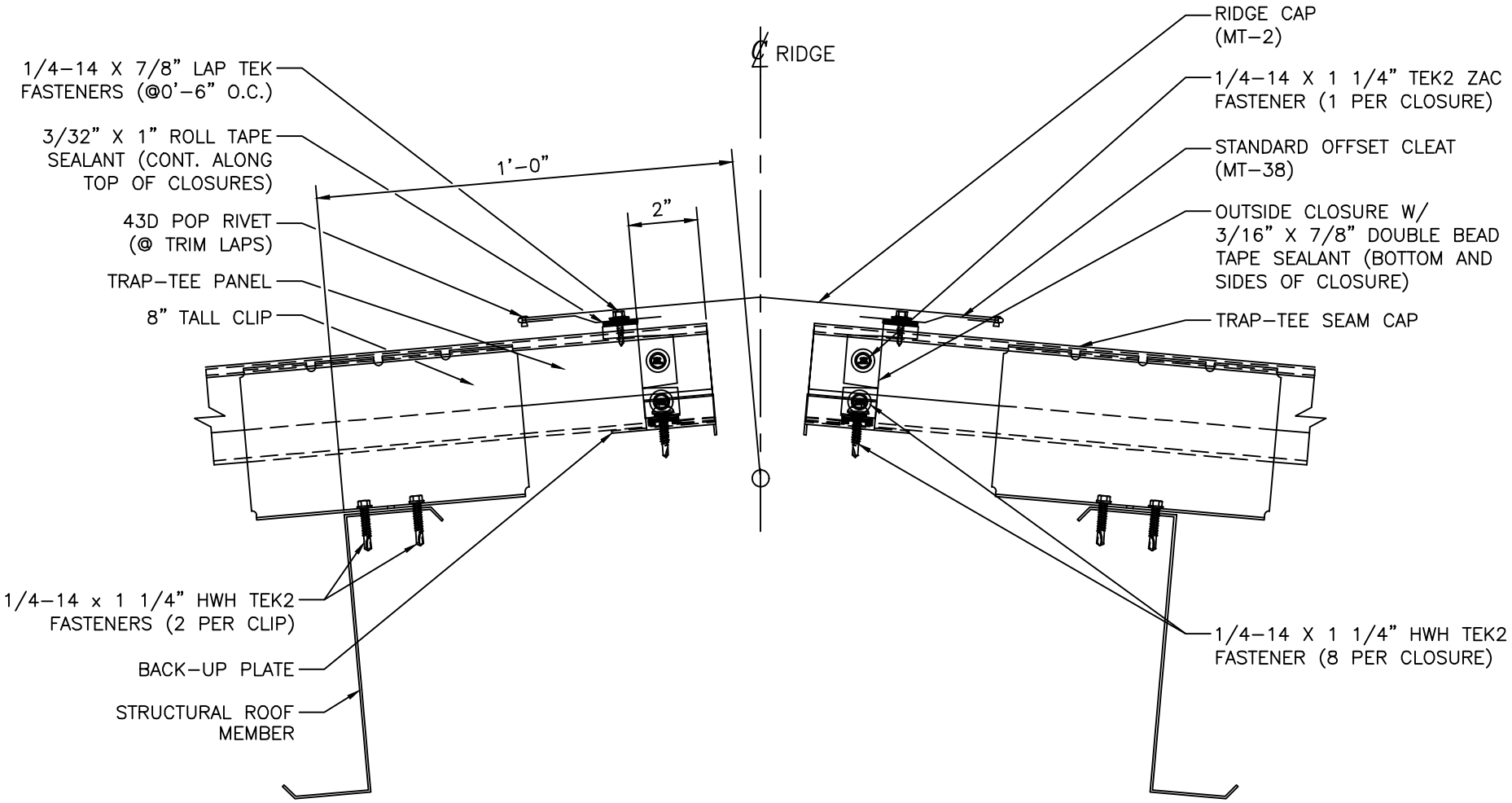

McELROY METAL	RIDGE DETAIL		ISSUE/REVISION DATE: 11/3/2022
	ROOF PANEL: TRAP-TEE	SUBSTRATE: PURLIN	SCALE: N.T.S.