MEDALLION–LOK

EAVE w/o GUTTER DETAIL

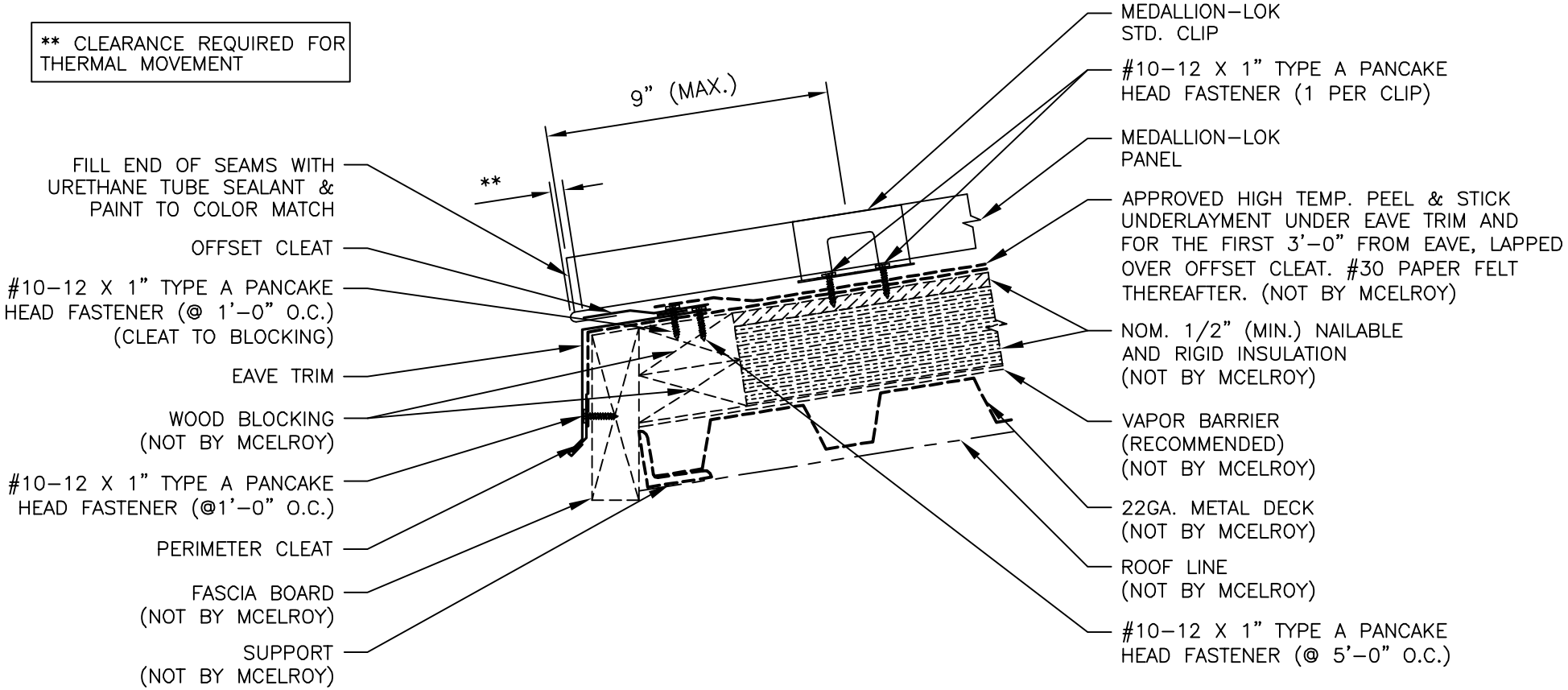

McELROY METAL, INC.

DATE CREATED: 06/30/08